THIS DRAWING AND SPECIFICATIONS, HEREIN, ARE THE PROPERTY OF DATA GENERAL CORPORATION AND SHALL NOT BE REPRODUCED OR COPIED OR USED IN WHOLE OR IN PART AS THE BASIS FOR MANUFACTURE OR SALE OF ITEMS WITHOUT WRITTEN PERMISSION.

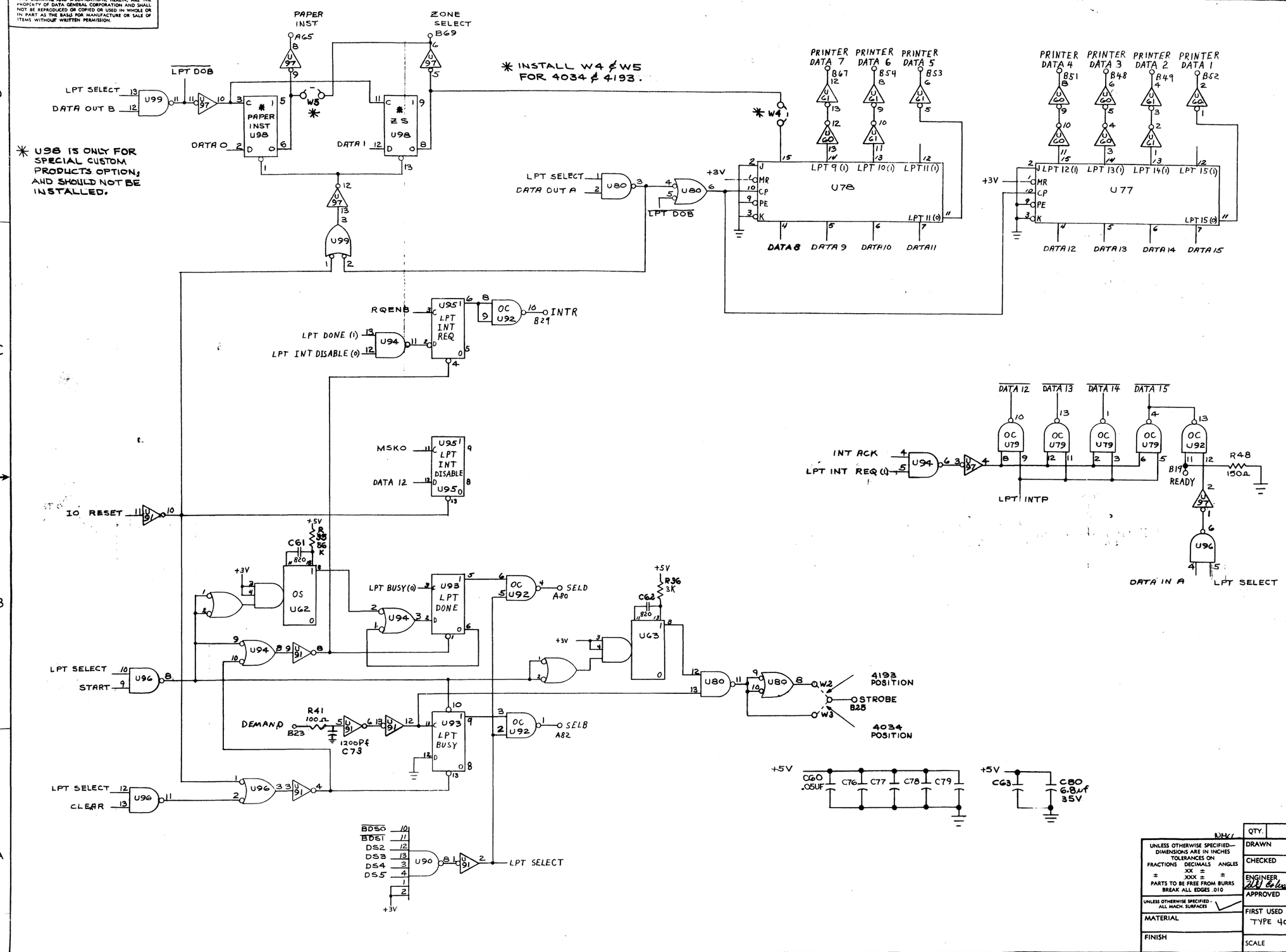

REVISIONS

REV.	DESCRIPTION	DRFTG.	APP. BY	DATE
01	1. ADD 100Ω & 1200 PF TO DEMAND INPUT 2. DELETE "LPT SELECT" FROM E16-3, ADD LPT INT REQ(1) TO E16-3.		SBooth	10/7/70
02	1. ADD WIRE TO PROPIGATE DCH P 2. ADD +3V SOURCE 3. CORRECT OUTPUT PINS ON BUSY FLOP		D.LIRUNE	10/8/70
03	ECO # 1213, JUMPERS NO'S. W1 & W2 ADDED.		R.W.C.	12-4-72
04	ECO # 1283, R35 10KΩ CHANGED TO 56KΩ & U98 PIN 5 CHANGED TO PIN 6 & PIN 6 " " PIN 5.		R.W.C.	12-27-72
05	ECO # 1310, JUMPER NO'S. W1 & W2 CHANGED. W1 TO W2 & W2 TO W3		R.W.C.	12-27-72
06	ECO # 1613		R.W.C.	[illegible]
07	ECO # 2423		R.E.J.	[illegible]
08	ECO # 2854	RAS	[illegible]	[illegible]
09	ECO # 2941	RAS		[illegible]

QTY.	DESCRIPTION	PART NO.

UNLESS OTHERWISE SPECIFIED— DIMENSIONS ARE IN INCHES TOLERANCES ON FRACTIONS ± DECIMALS .XX ± .XXX ± ANGLES ± PARTS TO BE FREE FROM BURRS BREAK ALL EDGES .010

UNLESS OTHERWISE SPECIFIED - ALL MACH. SURFACES

MATERIAL

FINISH

DRAWN

CHECKED

ENGINEER [signature] 6/24/74

APPROVED

FIRST USED ON TYPE 4034

SCALE

DATA GENERAL CORPORATION
SOUTHBORO, MASSACHUSETTS 01772

TITLE
LINE PRINTER CONTROL
(DATA PRODUCTS 2310, 2410)

SIZE	CODE	DRAWING NUMBER	REV.
D	001	000086	08

SHEET 1 OF 1