SUBSYSTEM COMPONENT BREAKDOWN

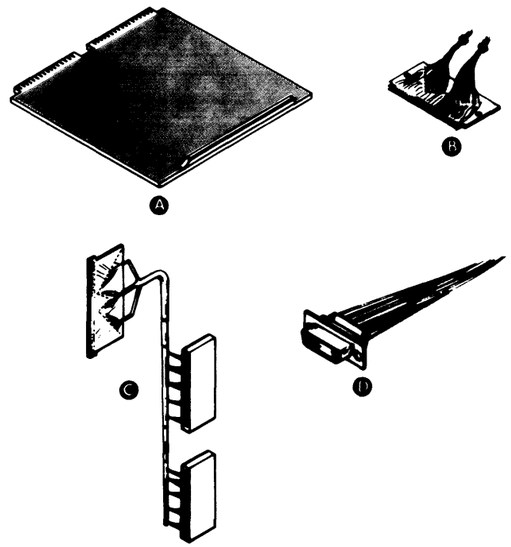

MAJOR COMPONENT

Item	Component	Mounting Location	Notes
A	4014/4034 Line Printer Controller	CPU chassis	used with series 4034 C&D, 6073, 6074 Printers
	4014/4193 Line Printer Controller	CPU chassis	4034 G&H
	Line Printer Data Channel Controller	CPU chassis	used with series 4215, 4216, 4218, 4219, 4244, 4245, 6088, 6089

CABLE

Item	Cable	Connecting	Max Allowed Lg ft / m	Notes
B	INTERNAL DEVICE	BP WW PINS and EDGE CONN	1.5 / .46	820, 1210, 1220
	INTERNAL DEVICE	BP WW PINS " EDGE CONN	1.5 / .46	NOVA 2/4 NOVA 2/10 ECLIPSE S/7, S/16
C	INTERNAL DEVICE	BP (CONNECTORS) EDGE CONN	/	ECLIPSE M/600, C350, S250, NOVA 4
D	INTERNAL DEVICE	BP WW PINS " SOCKET CONN	1.5 / .46	NOVA SUPER NOVA
	INTERNAL DEVICE	BP WW PINS " SOCKET CONN	1.5 / .46	800, 830, 840, 1200

SPECIFICATIONS OF THE CHASSIS-MOUNTED COMPONENTS

Component	Chassis	Slots Required	Max Allowable Data Channel Latency (μ sec)	Type of Data Channel Service Desired: High Speed	Type of Data Channel Service Desired: Standard	Max Allowable Programmed I/O Latency +	Controller's +5 Volt Current Draw (Amps)
4014/4034	Computer	1	N/A	N/A	N/A	2.5ms/line	1.0
4014/4193	Computer	1	N/A	N/A	N/A	2.5ms/line	1.0
005-8096	Computer	1	*			N/A	2.5

* There is no maximum data channel latency figure for the subsystem per se, however, in order to maintain maximum print rate, a line of data and a control character must be transferred within 2.5 ms after the initial demand assertion.

THIS DRAWING AND SPECIFICATIONS, HEREIN, ARE THE PROPERTY OF DATA GENERAL CORPORATION AND SHALL NOT BE REPRODUCED OR COPIED OR USED IN WHOLE OR IN PART AS THE BASIS FOR MANUFACTURE OR SALE OF ITEMS WITHOUT WRITTEN PERMISSION

REV	CC		
ECO			
APP			
DATE			

DRAWN Leonard Siciawski 9/25/78 | APPROVED
CHECKED 10/6/78 | FIRST USED ON
ENGINEER 7/15/78 | CODE IDENT 34984

TITLE
LINE PRINTER CONTROLLER
SERIES 4014/4034, 4014/4193
4215, 4216, 4218, 4219, 4244, 4245

DATA GENERAL CORPORATION
WESTBORO, MASSACHUSETTS 01581

SIZE	CODE	DRAWING NUMBER	REV.
C	010	000199	01

SHEET 1 OF 3

013-000840
BRUNING 40-526 27928

SHIPPING

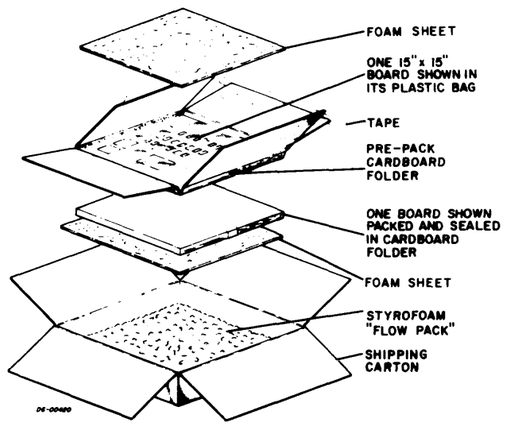

SHIPPING AND PACKAGE DATA					
Outside Dimensions			Weight (Gross)	Volume	Density
Length	Width	Depth			
in. / cm	in. / cm	in. / cm	lbs. / kg	cu ft / cu m	lbs/cu ft / kg/cu m
18 / 45	18 / 45	4 / 10	8 / 3.8	.75 / .02	10.7 / 180
SHIPPING SPECIFICATIONS			STORAGE SPECIFICATIONS		
Temperature Range °F / °C	Relative Humidity (Non-condensing)	Maximum Altitude	Temperature Range °F / °C	Relative Humidity (Non-condensing)	Maximum Period
-40 to +160 / -40 to +71	0/80%	50,000ft. / 15,200m	-40 to +160 / -40 to +71	0/30	90 days

DG-00224

INTERNAL CABLING

DATA CHANNEL CONTROLLER

Signal Names	Paddleboard Edge Connector Pin Numbers	Destination Pins on Backpanel (NOVA & ECLIPSE Line Computers)	Socket Connector Pin Numbers
READY	33	B-19	1
DEMAND	34	B-23	3
STROBE	35	B-25	5
DATA 1	36	B-27	7
DATA 2	37	B-31	9
DATA 3	38	B-34	11
DATA 4	39	B-36	13
DATA 5	40	B-38	15
DATA 6	41	B-40	17
DATA 7	42	B-48	19
ON LINE	32	B-15	21
PAPER INST.	43	B-49	23

Computer	Internal Cable Part No.
ECLIPSE M/600 C350, S250	005-012496
NOVA 820, 1210, 1220, 2, 3 ECLIPSE Series	005-001802
NOVA 4	005-012472
NOVA 800, 800Jumbo, 830, 1200 SUPERNOVA	*005-000384

* USE WIRE LIST 008-990 WHEN INSTALLING THIS CABLE

PROGRAMMED I/O CONTROLLER

Signal Names	Paddleboard Edge Connector Pin Numbers	Destination Pins on Backpanel (NOVA & ECLIPSE Line Computers)	Socket Connector Pin Numbers
ON LINE	33	B-19	1
DEMAND	34	B-23	3
STROBE	35	B-25	5
DATA 1	45	B-52	7
DATA 2	43	B-49	9
DATA 3	42	B-48	11
DATA 4	44	B-51	13
DATA 5	46	B-53	15
DATA 6	47	B-54	17
DATA 7	48	B-67	19
ZONE SELECT	49	B-69	21
PAPER INST.	12	A-65	23

Computer	Internal Cable Part No.
ECLIPSE M/600 C350, S250	005-012496
NOVA 820, 1210, 1220, 2, 3 ECLIPSE Series	005-001802
NOVA 4	005-012472
NOVA 800, 800Jumbo, 830, 1200 SUPERNOVA	**005-000384

** USE WIRE LIST 008-075 WHEN INSTALLING THIS CABLE

INSTALLING PC BOARD

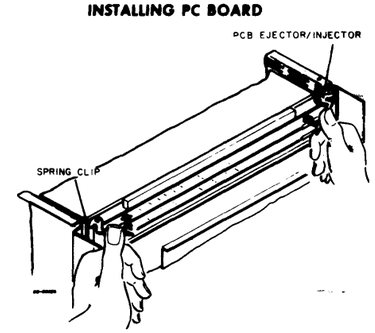

THIS DRAWING AND SPECIFICATIONS, HEREIN, ARE THE PROPERTY OF DATA GENERAL CORPORATION AND SHALL NOT BE REPRODUCED OR COPIED OR USED IN WHOLE OR IN PART AS THE BASIS FOR MANUFACTURE OR SALE OF ITEMS WITHOUT WRITTEN PERMISSION

REV												
ECO												
APP												
DATE												

DRAWN | CHECKED | ENGINEER | APPROVED | FIRST USED ON | CODE IDENT 34984

TITLE
LINE PRINTER CONTROLLER
SERIES 4014/4034, 4014/4193
4215,4216,4218,4219,4244,4245

DATA GENERAL CORPORATION
WESTBORO, MASSACHUSETTS 01581

SIZE	CODE	DRAWING NUMBER	REV.
C	010	000199	01

SHEET 2 OF 3

013-000840 BRUNING 40-526 27928

TAILORING

JUMPERING

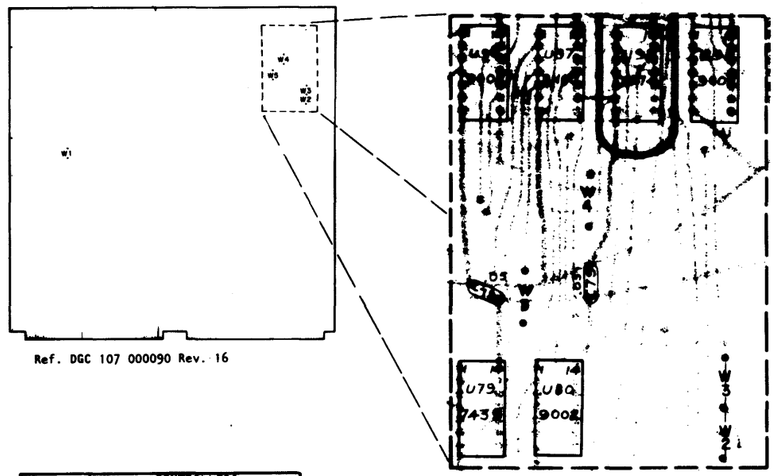

Ref. DGC 107 000090 Rev. 16

JUMPER	CONTROLLERS 005 000108 4014/4034	CONTROLLERS 005 003801 4014/4193
W2	OUT	IN
W3	IN	OUT
W4	IN	IN
W5	IN	IN
W1 NOT USED		

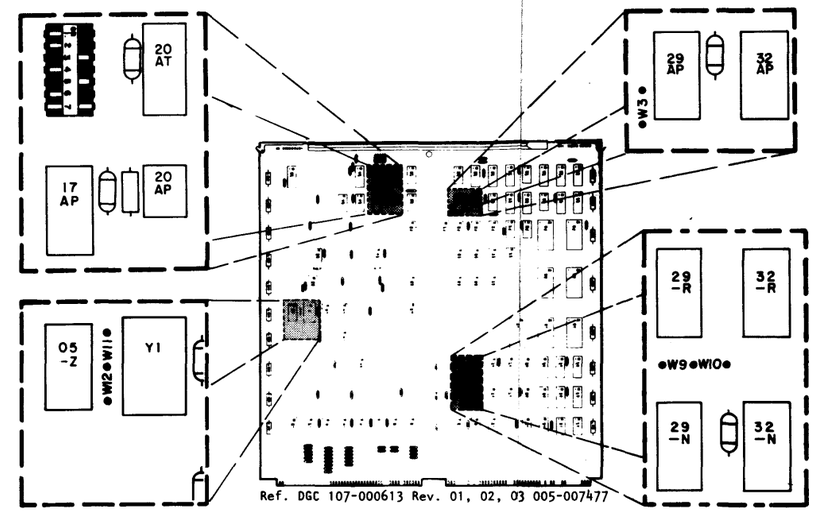

Ref. DGC 107-000613 Rev. 01, 02, 03 005-007477

DG-03382

JUMPERS			FUNCTION
W3	ALWAYS IN		Provides column counter resync for a paper feed or form feed
	W9	W10	
	IN	OUT	Selects Positive Assertion for LPT STROBE signal
	OUT	IN	Selects Negative Assertion for LPT STROBE signal
W11*	ALWAYS OUT		
W12*	ALWAYS IN		

* DGC 107-000613 REV 03 ONLY

DEVICE CODE SWITCHES

The data channel line printer controller has individually settable device code switches which may be set to any of the 64 possible codes. Typically this device will use the code 17_8

The switches use negative assertion logic which means that when a switch is in the OFF position, a logic one will be asserted. The switches may be pushed into the desired positions with a stylus or pen tip.

The device code 17_8 would be selected as shown below:

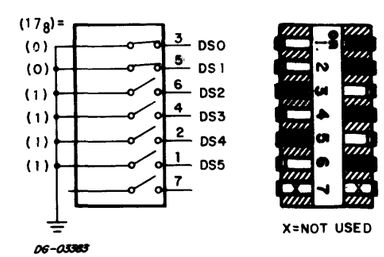

DG-03383

THIS DRAWING AND SPECIFICATIONS, HEREIN, ARE THE PROPERTY OF DATA GENERAL CORPORATION AND SHALL NOT BE REPRODUCED OR COPIED OR USED IN WHOLE OR IN PART AS THE BASIS FOR MANUFACTURE OR SALE OF ITEMS WITHOUT WRITTEN PERMISSION

REV													
ECO													
APP													
DATE													

DRAWN | CHECKED | ENGINEER

APPROVED | FIRST USED ON | CODE IDENT 34984

TITLE
LINE PRINTER CONTROLLER
SERIES 4014/4034,4014/4193
4215,4216,4218,4219,4244,4245

DATA GENERAL CORPORATION
WESTBORO, MASSACHUSETTS 01581

SIZE	CODE	DRAWING NUMBER	REV
C	010	000199	01

SHEET 3 OF 3

013-000840
BRUNING 40-528 27928